ML115-68

SIDE ACTION CHAIN CUTTER

MODEL CC-115SCA

MERROW

SERVICE MANUAL

® CLINTON INDUSTRIES, INC.
700 Washington Avenue
Carlstadt, N.J. 07072

40-0143-03A

CHAIN CUTTER CC 115 SCA
MERROW M
80-0193-15

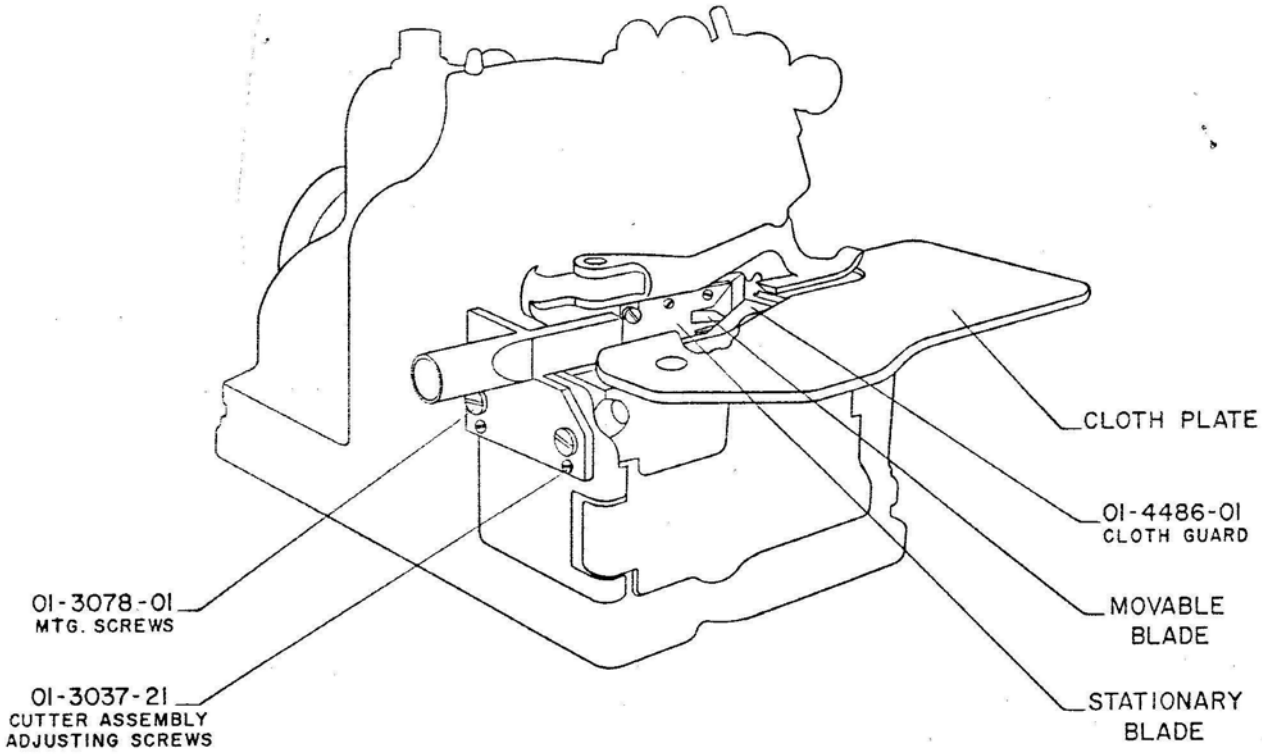

INS-777A

CC115 SCA CUTTER ASSEMBLY
MERROW
80-0193-15

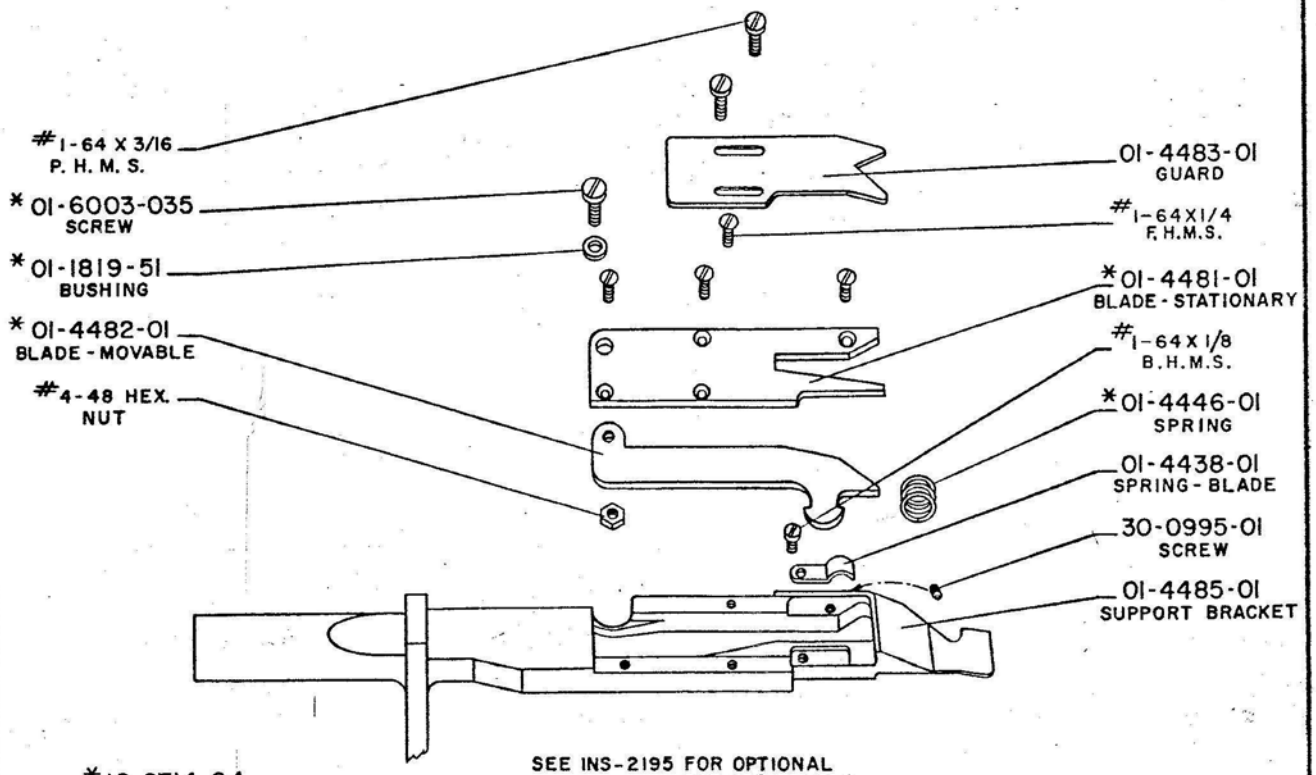

*10-0714-04
BLADE ASSY. COMPLETE

SEE INS-2195 FOR OPTIONAL CARBIDE BLADES

INS-743D

CHAIN CUTTER 115 SCA
REWORK OF CLOTH PLATE
MERROW "M"

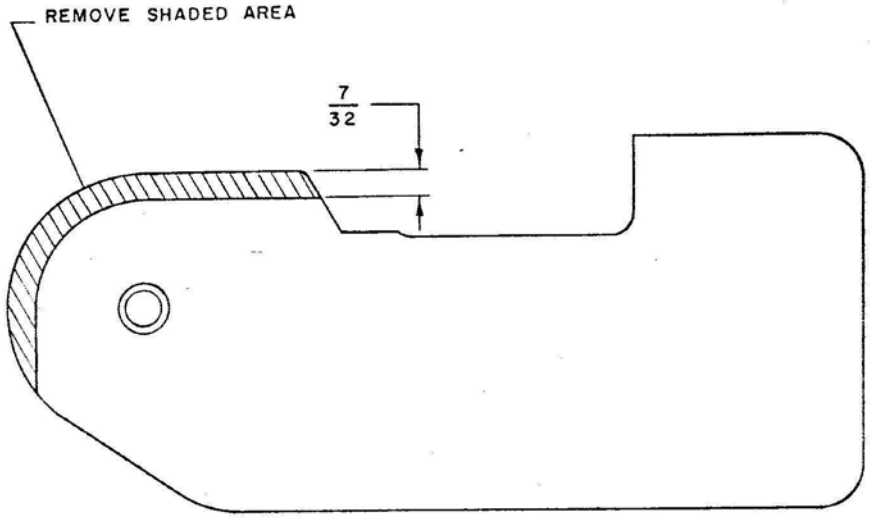

INS-742

CARBIDE BLADES
MODEL 115 SCA

10-0852-06, MERROW

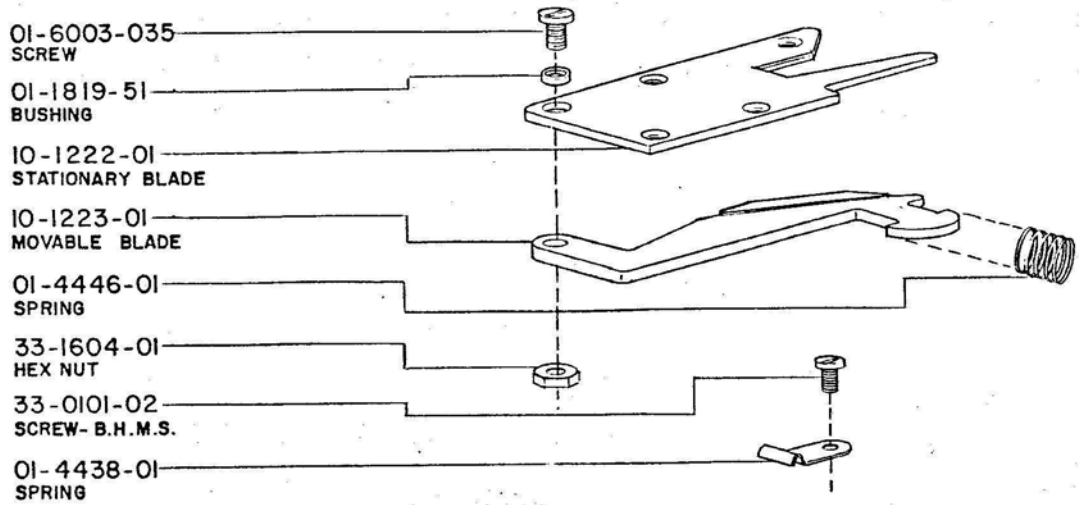

INS-2195

AIR VALVE ASSEMBLIES AND VENTURI INSTALLATIONS

TABLE MOUNTING

TREADLE AIR VALVE
TOE ACTION
80-0524-01

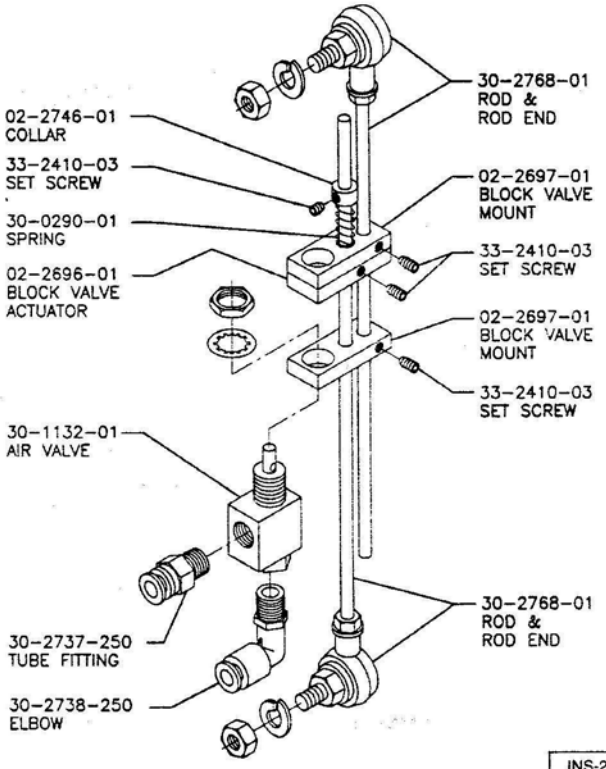

INS-2402A

PEDESTAL MOUNTING

TREADLE AIR VALVE INSTALLATION - 115FOTA &2115 FOTA
UNION SPECIAL 35800
80-6111-01

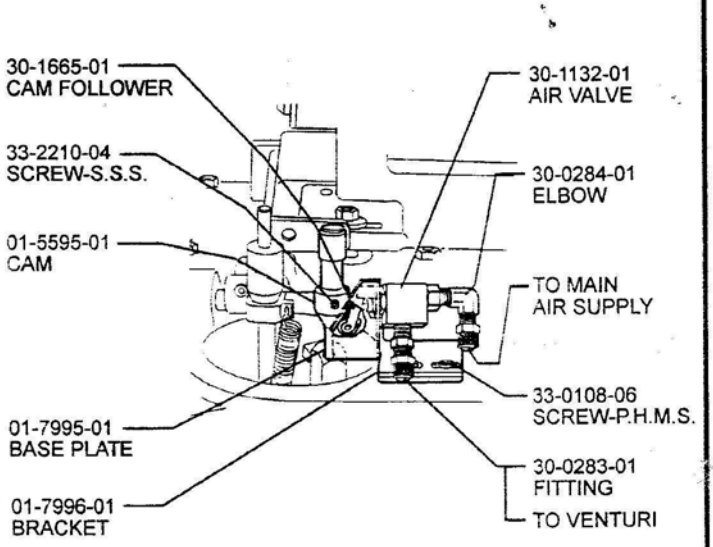

INS-1009B

VACUUM SYSTEM INSTALLATION
TREADLE OPERATED

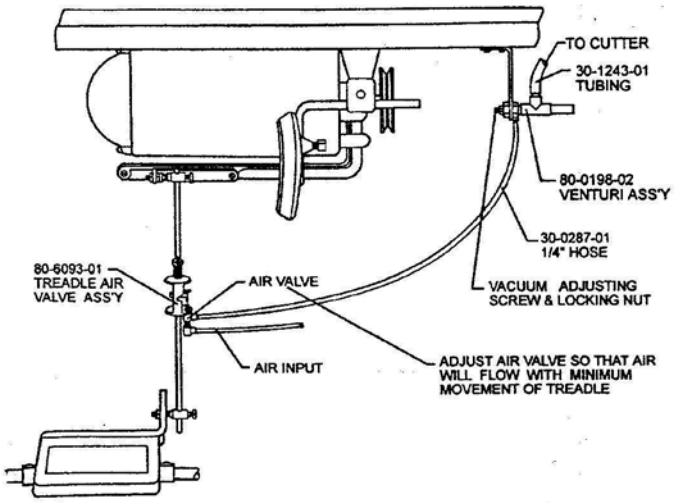

INS-1089A

VENTURI INSTALLATION - 115 FOTA & 2115 FOTA
UNION SPECIAL 35800

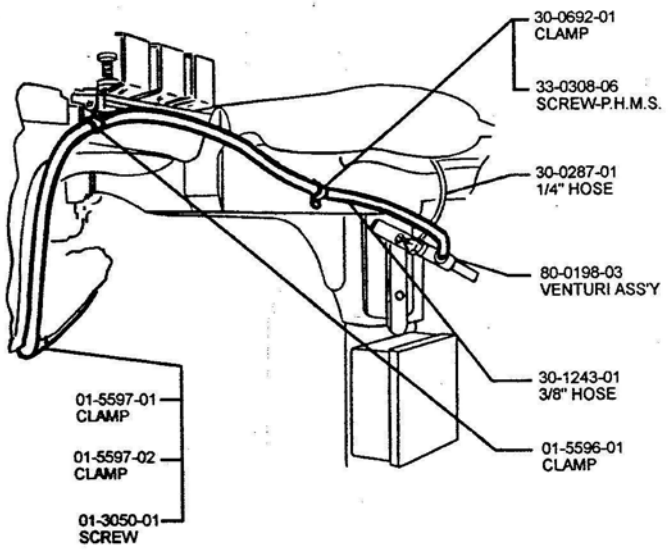

INS-1005C