CLINTON SERVICE GUIDE

MODEL 6115

FOR

FOTA MACHINE

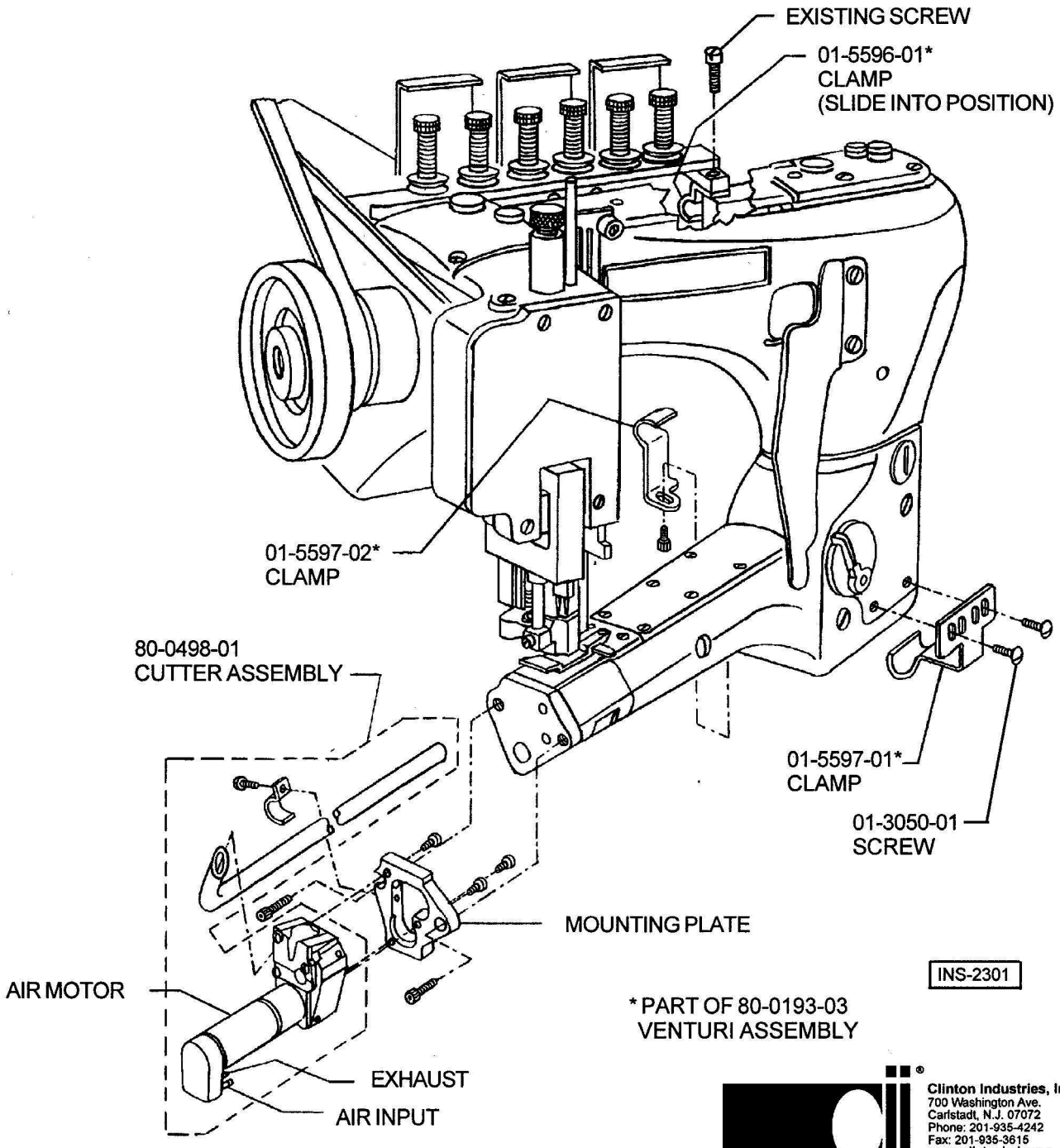

INS-2301

* PART OF 80-0193-03
VENTURI ASSEMBLY

Clinton Industries, Inc.
700 Washington Ave.
Carlstadt, N.J. 07072
Phone: 201-935-4242
Fax: 201-935-3615
www.clintonind.com
E-mail: general@clintonind.com

7780

INS-1008F

DRILLING INSTRUCTIONS

CHAIN CUTTER MODEL 115VS, 115FOTA, 2115FOTA, 4115FOTA

1. PLACE THE DRILL JIG ON THE MACHINE AS SHOWN.
2. ALIGN THE TOP OF THE DRILL JIG WITH THE TOP OF THE MACHINE BED.
3. TIGHTEN THE LOCKNUT ON THE END OF THE SHOULDER SCREW.
4. DRILL TWO HOLES MARKED "A" WITH #29 DRILL SUPPLIED.
5. LOOSEN THE LOCKNUT AND REALIGN THE DRILL JIG SO THAT THE TAPPING GUIDE HOLES WILL ALIGN WITH THE DRILLED HOLES.
6. TAP THE HOLES WITH AN 8-32 TAP USING THE TAP GUIDE HOLES TO GUIDE THE TAP STRAIGHT.
7. REMOVE THE DRILL JIG.

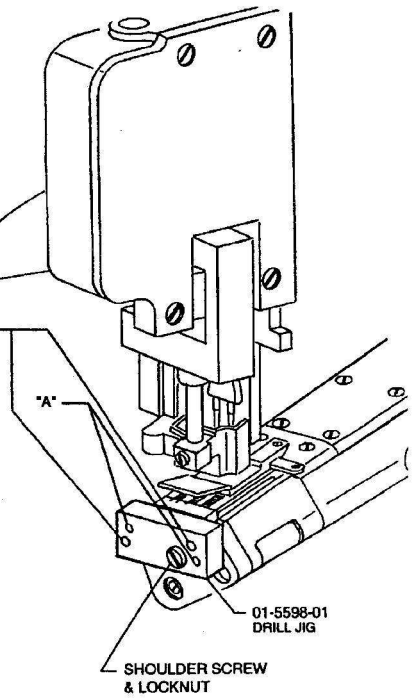

NOTE:
FOR U.S. 35800 DM AND DN: THE LOCATING HOLE IN THESE MACHINES IS 5/16" DIA. A REDUCER BUSHING 5/16" O.D. X 1/4" I.D. IS REQUIRED TO PROPERLY LOCATE THE DRILL FIXTURE.

INS-1009B

TREADLE AIR VALVE INSTALLATION-115FOTA & 2115FOTA

UNION SPECIAL 35800
80-6111-01

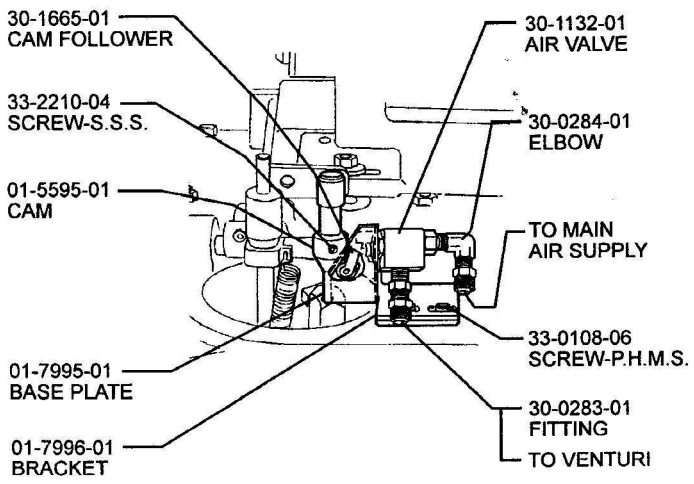

AIR VALVE MOUNTING:

1. SLIDE CAM ONTO THE TREADLE LINKAGE.
2. MOUNT THE BASE PLATE SO THAT THE OPEN SLOTTED SIDE CAPTURES THE LINK.
3. LOCATE THE AIR VALVE ASSEMBLY TO THE ANGLE OF THE CAM IN A NONDEPRESSED POSITION.
4. MARK THE CENTER LOCATION OF THE SLOTS IN THE MOUNTING BRACKET AND THE BASE PLATE.
5. CENTER PUNCH, THEN DRILL AND TAP 8-32.

INS-1005D

VENTURI INSTALLATION-115 FOTA & 2115 FOTA

UNION SPECIAL 35800 DWW

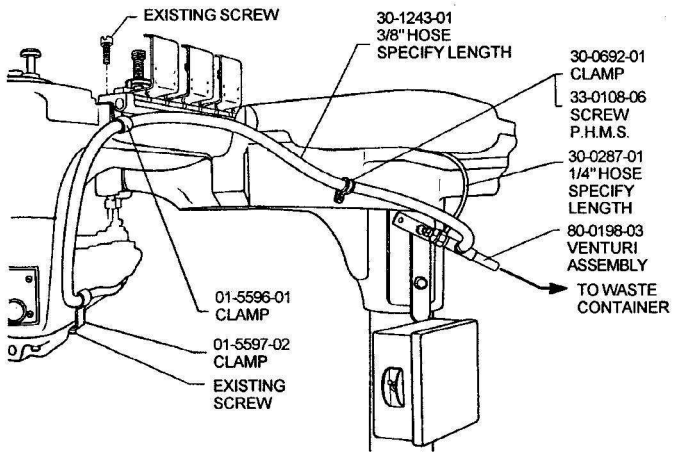

VENTURI MOUNTING:

1. MOUNT VENTURI UNDER ONE OF THE SCREWS HOLDING THE SWITCHBOX.
2. DRILL AND TAP ONE 8-32 HOLE FOR THE VACUUM HOSE CLAMP.
3. INSTALL THE VACUUM HOSE, CLAMPS AND PRESSURE HOSES.

ADJUSTMENTS:

A. THE VACUUM ADJUSTING SCREW IS PRESET IN THE CLOSED POSITION. IN ORDER TO OBTAIN VACUUM, TURN THE ADJUSTING SCREW COUNTERCLOCKWISE ONE HALF TURN EACH TIME UNTIL THE DESIRED VACUUM IS REACHED. IN MOST APPLICATIONS ONE TO TWO FULL TURNS ON THE VACUUM ADJUSTING SCREW WILL PROVIDE SUFFICIENT VACUUM.

B. USE ONLY THE AMOUNT OF VACUUM NEEDED FOR EFFECTIVE OPERATION. TOO MUCH VACUUM MAY INTERFERE WITH THE MATERIAL FEED AND CAUSE AN UNNECESSARY WASTE OF COMPRESSED AIR.

INS-570-12D

FILTER, OILER, REGULATOR & GAUGE ASS'Y

80-0415-01

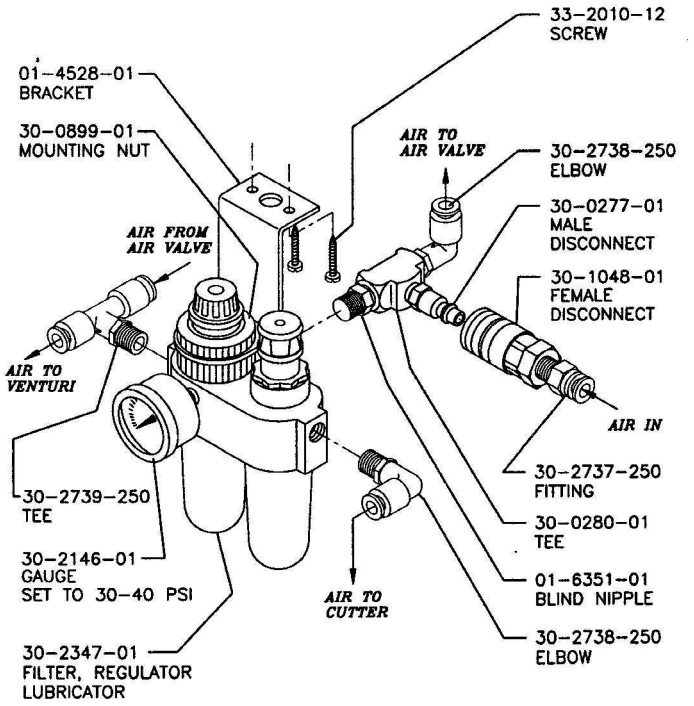

1780

INS-2289-1F

CUTTER ASSEMBLY
6115 FOTA
80-0498-01

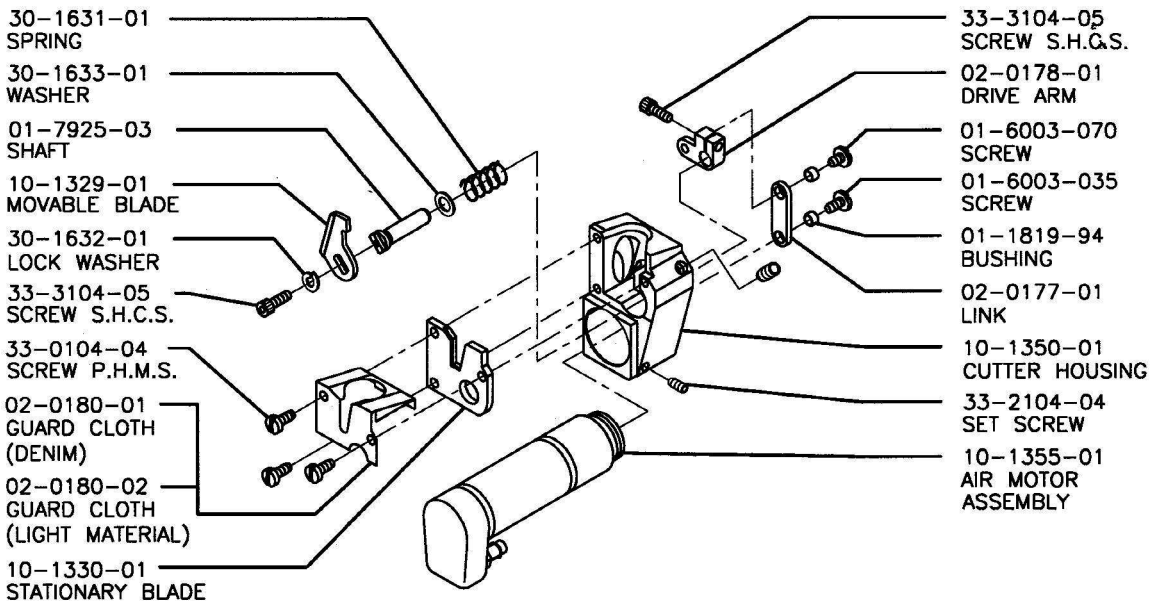

INS-2383A

INTERFACE KIT ASSEMBLY
MODEL 6115FOTA

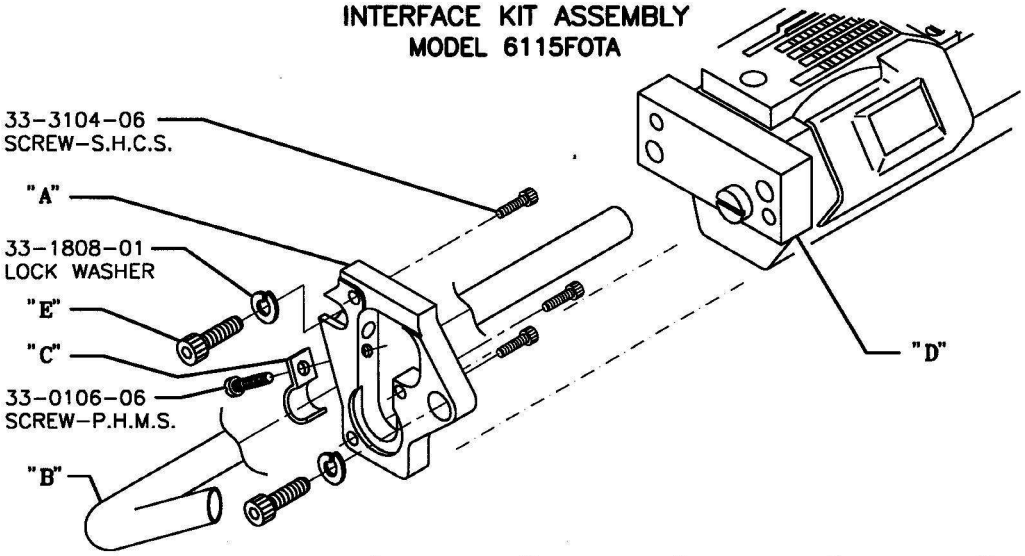

		A	B	C	D	E
MACHINE MODEL	INTERFACE KIT	MOUNTING PLATE	FLEXIBLE ELBOW	TUBING CLAMP	DRILL FIXTURE	MOUNTING SCREWS
U.S. 35700 U.S. 35800 YAMATO FD62	80-0506-01	02-0191-01	02-0661-01	02-0660-01	80-0245-01	33-3108-08
U.S. 36200 DT-30	80-0506-02	02-0191-01	02-0661-01	02-0660-01	80-0245-01	33-3108-08
SINGER 261 CONSEW 345	80-0506-03	02-0688-01	02-0661-02	02-0660-01	10-1293-01	33-3108-08
JUKI 191	80-0506-04	02-0689-01	02-0661-03	02-0660-02	10-1293-02	33-3108-08
BROTHER 925	80-0506-05	02-0686-01	02-0661-03	02-0660-02	10-1293-03	33-3108-08
RIMOLDI 184	80-0506-06	02-0687-01	02-0661-02	02-0660-01	———	33-3108-06
BROTHER 926	80-0506-07	02-0694-01	02-0661-04	02-0660-02	10-1293-04	33-3108-08
TOYOTA DT6	80-0506-08	02-0688-01	02-0661-02	02-0660-01	10-1293-05	33-3108-08
MAUSER 41	80-0506-09	02-3089-01	02-0661-01	02-0660-01	10-1293-06	33-3108-06

INS-2289-2

CUTTER ADJUSTMENTS

STEP 1

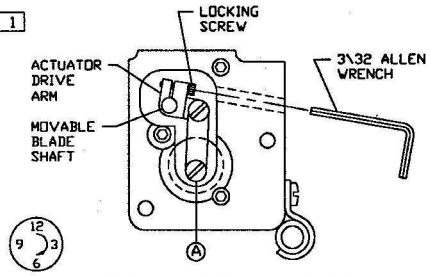

NOTE: WITH A SMALL SCREW DRIVER, POSITION ECCENTRIC SCREW Ⓐ AT 6 O'CLOCK.

STEP 2

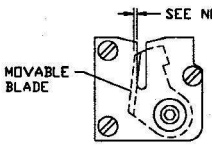

NOTE: ADJUST MOVABLE BLADE SLIGHTLY PAST STATIONARY BLADE AS SHOWN.

STEP 3

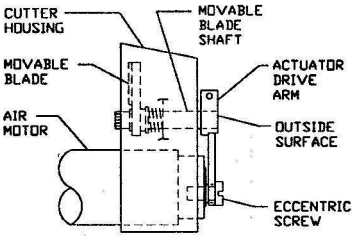

NOTE:
LOCK THE ACTUATOR DRIVE ARM TO THE MOVABLE BLADE SHAFT WITH THE 3/32 ALLEN WRENCH, MAKING SURE THAT THE END OF THE SHAFT IS FLUSH WITH THE OUTSIDE SURFACE OF THE ACTUATOR DRIVE ARM.
ROTATE THE ECCENTRIC SCREW CLOCK-WISE AND CHECK TO SEE THAT THE MOVABLE BLADE GOES THRU ITS MOTION FREELY.

INS-2017F

AIR CIRCUITS-EXTERNAL AIR DRIVE CHAIN CUTTERS

CC-V

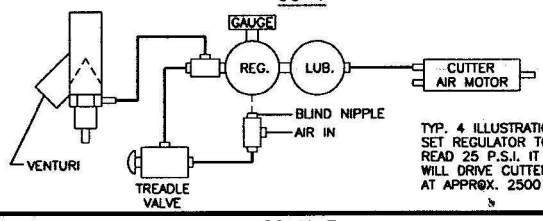

TYP. 4 ILLUSTRATIONS: SET REGULATOR TO READ 25 P.S.I. IT WILL DRIVE CUTTER AT APPROX. 2500 R.P.M.

CC-V-FL

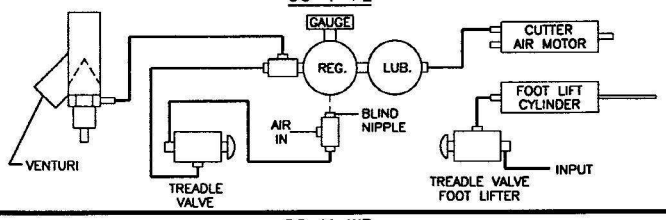

CC-V-WR

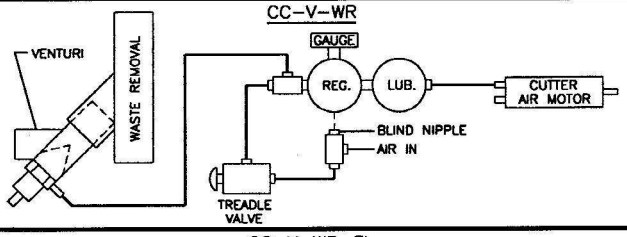

CC-V-WR-FL

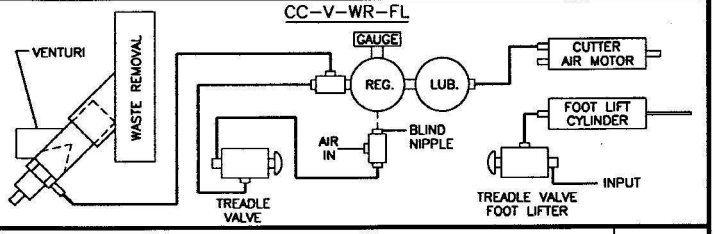

ML200-1D

THREAD CATCHER FOR F.O.T.A. MACHINES MODEL TC-200 80-0476-01

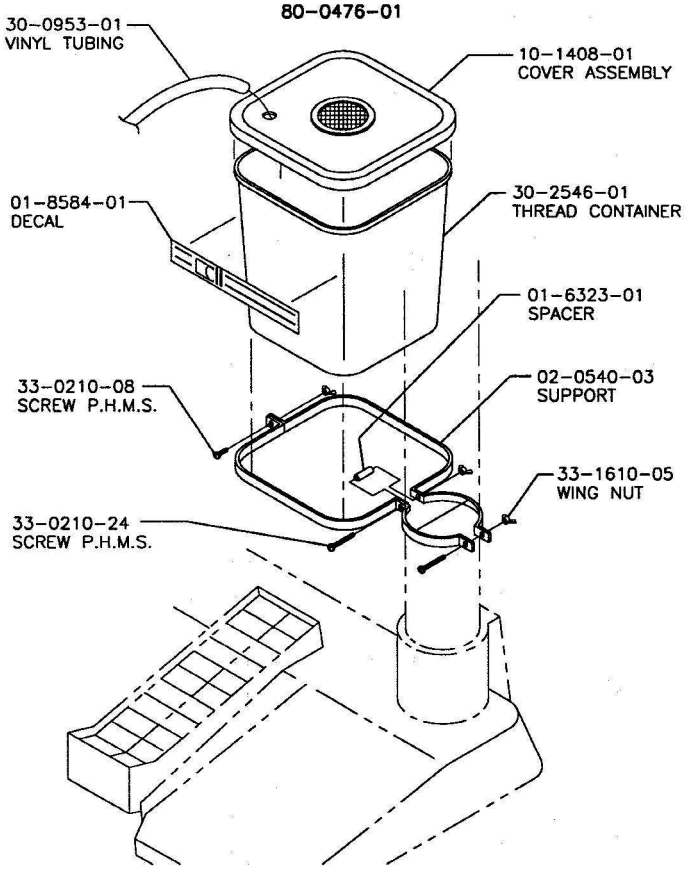

INS-2239C

AIR MOTOR MAINTENANCE

CLEANING AND OILING OF F.O.R.G. AIR MOTOR CHAIN CUTTERS

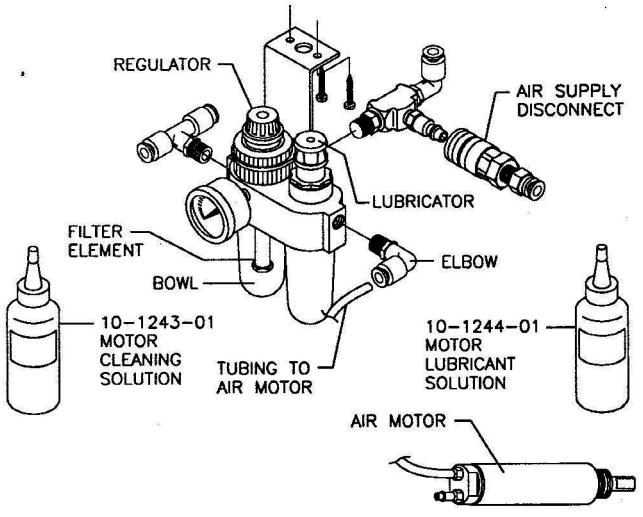

FILTER / REGULATOR
Disconnect the air supply, remove the plastic bowl and filter element. Wash with household detergent and reassemble.

LUBRICATOR
Disconnect the air supply, remove the bowl and wash with household detergent. Fill the bowl with lubricant 10-1244-01 and reassemble. Set the lubricator in the closed position this will produce a microfog mist to keep the motor well lubricated. Excessive oil or wrong oil will result in a sluggish operation and power loss.

AIR MOTOR
Disconnect the air supply and the motor inlet tubing at the lubricator. Squirt some motor cleaning solution into the inlet tubing. Connect the tubing and connect the air supply and operate the motor until the solution is flushed out. Repeat this process again only this time add a few drops of lubricant instead of the cleaning solution.

7780